Modeling of Photovoltaic Microgrids for Bulk Power Grid Studies

Ali Keyhani, Fellow, IEEE
The Ohio State University
kevhani@ece.osu.edu

***Abstract*-- The integration of photovoltaic (PV) microgrids will have a transformative impact on the smart power grid. However, there are a number of research problems that must be studied to facilitate penetration of PV-generation systems into power grids. These problems are: i) PV models based on manufacturers' data that are non-confidential and can be used by smart grid stakeholders for microgrid studies; ii) PV-generating station models that are validated and non-confidential that can be used by utilities for bulk power flow and short circuit studies; and iii) PV-generator equivalent dynamic models for bulk power system stability studies. This paper seeks to address the modeling challenges of PV-generating stations.**

***Index Terms*--microgrids, photovoltaic (PV), PV-generator equivalent**

I. Introduction

THE nonlinear behaviors of PV modules are modeled by using a single- or double-diode model. These consist of a current source, which is photo-generated, a diode in parallel with it, a series resistance, and a parallel resistance. Some are approximations of the above models. These approximations are made by ignoring the series and/or parallel resistance. D. Sera et al. [1] devised a method to determine the parameters of a single-diode model, including both series and shunt resistances respectively, from datasheet information. Reference [1] proposed an alternative formula of the cell dark saturation current from datasheet values. B. Galiana et al. [2] proposed a three-dimensional distributed model for high-concentrator solar cells consisting of electrical elements. The maximum power point tracking (MPPT) was studied by Kimbal and Krein [3], who developed a new method for ripple correlation control (RCC) for MPPT tracking. The proposed algorithm locates the optimal operating point consistently. T. Esram and P. L. Chapman [4] studied 19 distinct methods of MPPT reported in the literature. They concluded that the ease of implementation is an important factor in deciding which MPPT technique to use. However, no research work has been reported for the development of equivalent nonlinear PV sources as a function of temperature and photo-generated current and PV-generating station dynamic and steady state models for bulk power grid studies.

Both stand-alone and grid-connected DG was studied in reference [5]. The control technology was based on perfect robust servomechanism and sliding mode control for total harmonic distortion (THD) minimization and active and reactive power control [6]. This paper addresses the research problems in modeling a PV-generating station.

II. Problem Description

The power converters are supplied from PV sources that convert the sun irradiance energy to DC power. The PV sources have small stored energy. The PV-generating stations also have low short circuit current contribution. However, as penetrations of PV-generating stations are increased in the power grids, we need a high fidelity model for PV-generating stations to study power-grid planning, evaluation of future scenarios, and answers to "if/then conditions" for grid designs. Key questions to be answered by simulations are: Does the grid meet performance standards? And how does the addition of new equipment affect grid reliability and stability? Therefore, high fidelity models of PV stations are needed for grid power flow static voltage stability. In addition, PV models are needed for dynamic stability studies and voltage recovery and short circuit breaker duty, protection design and coordination, control interaction, and harmonics, etc.

III. Modeling of PV Arrays

A PV-generating station is shown in Fig. 1(a). It consists of the PV arrays with inverters converting the DC voltage of the PV to AC. The PV-generating station is connected to the local utility via station transformers. The equivalent steady state per unit representation of the PV station complete with the interfacing transformers is shown in Fig. 1(b). The PV modules are not ideal vol-

tage sources. A PV module voltage drops nonlinearly as its output current increases. The power output by the PV module varies with the load and reaches a maximum at a point called the "maximum power point" (MPP). The characteristics of the PV modules depend on a number of environmental factors like temperature and irradiance. Figures 2(a) and 2(b) depict PV module V-I characteristics and output power characteristics as functions of temperature (irradiance fixed at 100 mW/cm^2) and irradiance (temperature fixed at 25°C), respectively.

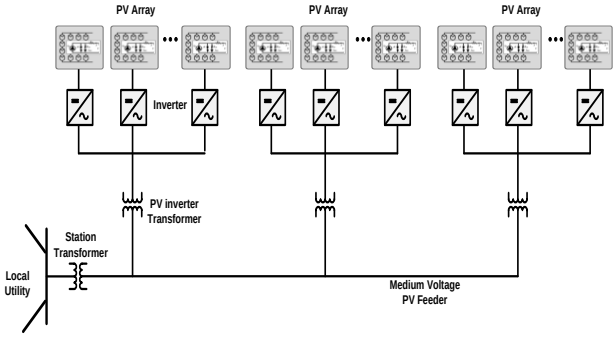

(a)

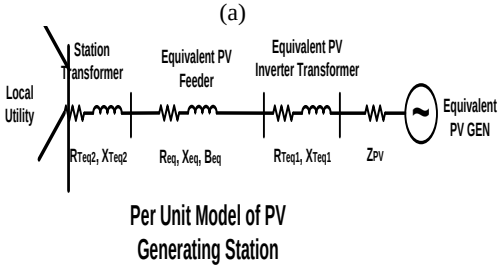

(b)

Fig. 1. (a) The schematic diagram, and (b) per unit equivalent diagram of the PV station

Each connection, whether it is cells in series to form a module, modules in series to form a string, or strings in parallel to form an array, can be modeled by its corresponding Shockley-Read equation. The equivalent models of Fig. 3(a) and 3(b) reflect the lumped parameters of a PV array. Among many mathematical models proposed for a PV source, a single-diode model is often used. Several similar models of the PV source have also been proposed with slight variations [1-4]. A model with two diodes in parallel is shown in Fig. 3(b). Each model is defined by a number of nonlinear relationships and a number of parameters.

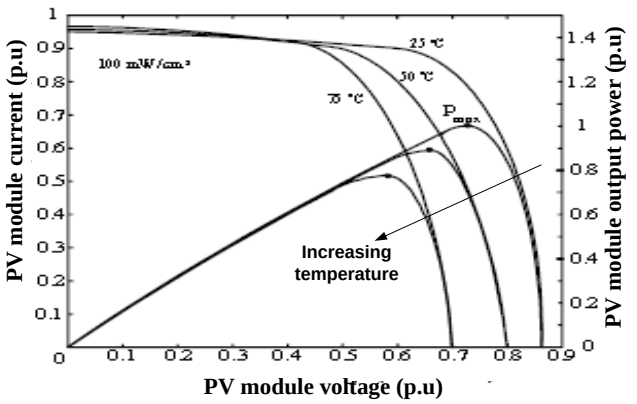

(a)

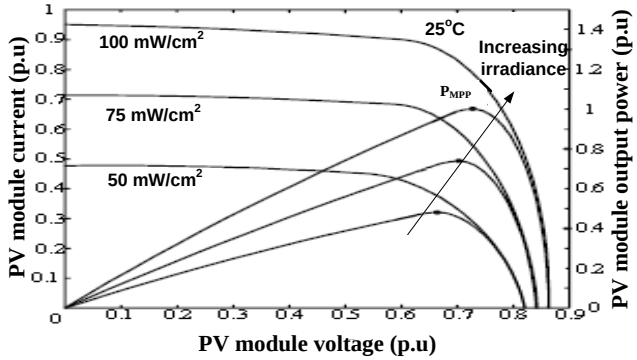

(b)

Fig. 2(a) and (b). PV module V-I characteristic and output power characteristic as a function of increasing temperatures and increasing irradiance at 25° centigrade

The single-diode model for a module or a string can be mathematically modeled as given in Equation (1) as follows:

$$I = I_{ph} - I_0\left\{\exp\left[\frac{q(V+IR_s)}{n_s AkT}\right]-1\right\} - \frac{V+IR_s}{R_{sh}} \qquad (1)$$

where V is the output voltage in volts; I is the output current in amps; I_{ph} is the photo-generated current in amps; I_o is the dark saturation current of the diode in amps; A is the diode quality factor; T is the junction temperature in kelvin; k is the Boltzmann's constant in joules per kelvin; q is the charge of an electron in coulombs; R_s is the equivalent lumped series resistance in ohms; R_{sh} is the equivalent lumped parallel resistance in ohms; n_s is the number of cells in series in a module or a string. For an array, I_{ph} and I_o are multiplied by the number of strings in parallel. For array PV sources, R_s and R_{sh} represent the equivalent lumped resistances. The manufacturer's datasheet provides the user with open circuit voltage, short circuit current, and the number of cells in the module and the voltage and current at the maximum power point.

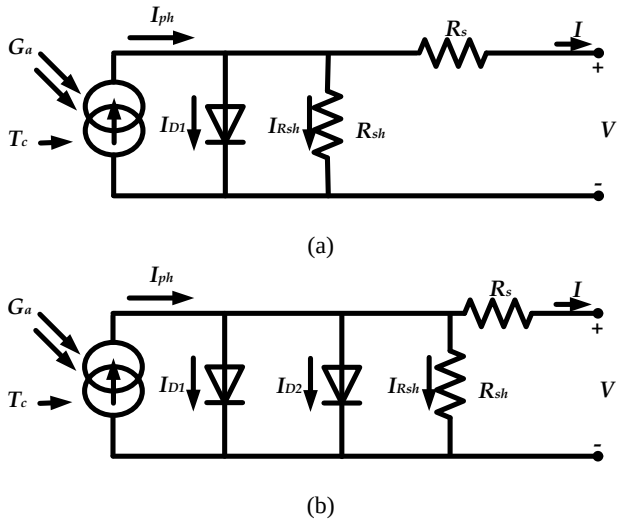

Fig. 3(a) and (b). The single and double exponential model of a photovoltaic cell

The diode model in Equation (1) is presented by the exponential term and it adds to the nonlinear V and I characteristics of the PV model. When a PV module is irradiated with light, it generates I_{ph}. This current is a function of the amount of the irradiance and temperature of the PV module. From the geographical location of the PV station and the day of the year, the amount of irradiance the PV module is subjected to can be estimated. The irradiance on the PV module also depends on factors like the latitudinal location of the plant, the reflectivity in that area, the time of the year, and the angle of tilt of the PV modules.

To develop simulation models for bulk power system studies, there are a number of modeling problems that must be studied. The first problem is the modeling of the PV source impedance as we look into the PV source from the DC bus. The second problem is looking into the AC bus and estimating the input impedance of the inverter and the PV source. The third problem is the development of an equivalent dynamic generator model as seen from the terminal of the local grid.

Typically, a module is rated at a maximum power of a couple of hundred watts. This limits the maximum power that a PV module can deliver. To supply loads at higher voltages, several modules are connected in series to form a string. Similarly, to supply higher currents, the strings are connected in parallel to form an array. A number of arrays are used as a source of several kilowatts of power.

Figures 4 (a) and (b) show the equivalent circuit of a string where modules are connected in series to form a string. The equivalent circuit formed by connecting strings in parallel to form an array is shown in Fig. 5 (a) and (b).

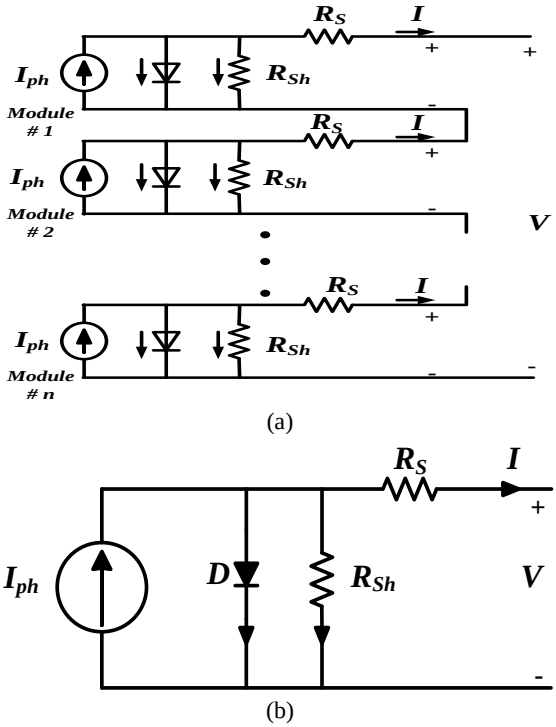

Fig. 4(a) Circuit showing modules connected in series to form a string, and (b) Equivalent circuit of the string

In Equation (1), V_t, the junction thermal voltage, is given as:

$$V_t = \frac{AkT_{STC}}{q} \tag{2}$$

$$A = \frac{qV_t}{kT_{STC}} \tag{3}$$

It is helpful to express the equations in terms of V_t rather than A. The value of A can be determined easily if V_t is found. By simply rearranging the terms of Equation (2), we will have Equation (3).

The term STC denotes the standard conditions used to measure the nominal output power of photovoltaic cells. In Equation (1), the term '-1' is much smaller than the exponential term, and it is generally ignored. The problem of estimating the model parameters is to determine the five parameters – I_{ph}, I_o, R_s,R_{sh} , and A from the data sheet provided for PV modules' manufacturers measured under STC. Since A can be expressed easily in terms of V_t, q, k, and T_{STC}, of which only the former is unknown, the approach will be to first obtain V_t, and then solve Equation (3) for A. The measured data at a number of test conditions used for model development are I_{SC}, the short-circuit current; V_{OC}, the open-circuit voltage; V_{MPP}, voltage at the maximum power point (MPP); and I_{MPP}, the current at the MPP.

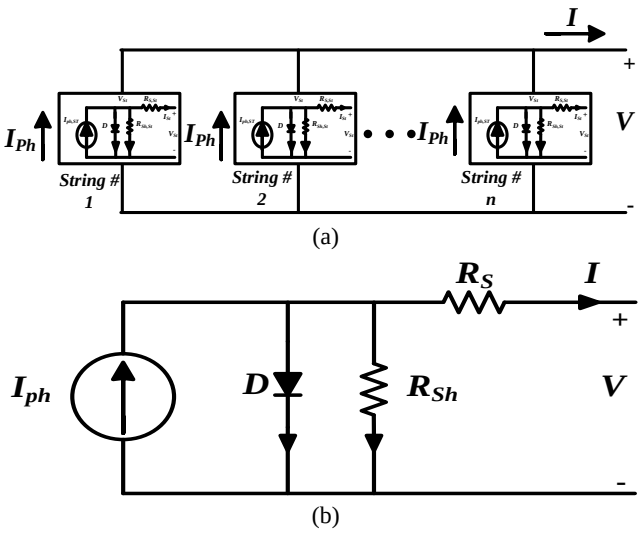

Fig. 5(a) Circuit showing strings connected in parallel to form an array, and (b) Equivalent circuit of the array

Since we have three specified points from data sheets, that is, PV short-circuit current, PV open-circuit voltage, and maximum power point, we can define three nonlinear equations in terms of unknown parameters. However, we need two additional equations to estimate the five parameters of the model of Equation (1). Since the maximum power point corresponds to the point where the power is maximum on the V-I characteristic, we have:

$$\left.\frac{dP}{dV}\right|_{\substack{V=V_{MPP}\\ I=I_{MPP}}} = 0 \tag{4.1}$$

$$\left.\frac{dI}{dV}\right|_{I=I_{sc}} = -\frac{1}{R_{sho}} \tag{4.2}$$

Since we are estimating five parameters, a fifth equation is still needed. The derivative of the current with the voltage at short-circuit is given as the negative of the reciprocal of R_{sho}, as shown in Equation (4.2). Assuming R_{sho} is approximately equal to R_{sh}, then R_{sh} can be substituted in place of R_{sho} in Equation (4.2). This assumption will be relaxed later. Hence, five equations in five variables have been established. Since the remainder of the development will focus solely on estimating the five parameters, it will be conducive to represent the estimation in standard mathematical terms. In order to establish this form, let x represent the vector of unknowns and a represent the vector of known values; then the transformation can be presented as:

$$x = [x_1 \quad x_2 \quad x_3 \quad x_4 \quad x_5]^T = \begin{bmatrix} I_{ph} & I_o & V_t & R_s & R_{sh} \end{bmatrix}^T \tag{5}$$

$$a = \begin{bmatrix} a_1 & a_2 & a_3 & a_4 & a_5 \end{bmatrix}^T = \begin{bmatrix} I_{Sc} & V_{oc} & V_{MPP} & I_{MPP} & n_s \end{bmatrix}^T \tag{6}$$

The operating data for the current, I, the voltage, V, V_{MPP}, and I_{MPP} ($P_{MPP}=V_{MPP}.I_{MPP}$), play an important role in reducing the problem mathematically. These variables represent the operating condition of the PV source as irradiance energy received from the solar radiation. In keeping with the changes in other variables, these will now be represented by the vector y as follows:

$$y = \begin{bmatrix} y_1 & y_2 & y_3 \end{bmatrix}^T = \begin{bmatrix} I & V & P \end{bmatrix}^T \tag{7}$$

After applying the change to a more mathematically conducive form, the equation of the single exponential model, Equation (1), changes to:

$$y_1 = x_1 - x_2\left\{\exp\left[\frac{y_2 + y_1 x_4}{a_5.x_3}\right] - 1\right\} - \frac{y_2 + y_1.x_4}{x_5} \tag{8}$$

As mentioned earlier, the term '-1', in the bracket in the second term of Equation (8), is insignificant compared to the exponential term, and can generally be ignored, giving:

$$y_1 = x_1 - x_2 \exp\left[\frac{y_2 + y_1 x_4}{a_5.x_3}\right] - \frac{y_2 + y_1.x_4}{x_5} \tag{9}$$

The above formulation can be extended to facilitate the estimation of the PV model's parameters from the manufacturer's data sheet.

IV. Case Study

Table I presents the data sheet for a typical manufacturer's module. The effect of change in temperature and irradiance can be studied by plotting the V-I and voltage-power (V-P) characteristics at different temperatures and irradiances. A testbed has been developed in the Matlab m-file to plot these curves. The testbed also estimates the values of the voltage and current at MPP. Figures 6 through 8 show the 80 kW PV array characteristic (V-I and V-P) at different operating conditions. The MPPs, estimated by the method mentioned before, are marked on the curves by a small circle on each curve. The V-P characteristics are obtained by taking the product of the voltage and current. Table II lists the maximum power point of the array at different environ-

mental conditions as estimated by the proposed method. Table III presents the estimated parameters.

TABLE I
DATASHEET VALUES AND THE ESTIMATED PARAMETERS OF A MODULE

Datasheet Values		Estimated Parameters	
I_{sc}	*7.36 A*	I_{ph}	*7.36 A*
V_{oc}	*30.4 V*	I_o	*0.104 μA*
V_{mp}	*24.2 V*	A	*1.310*
I_{mpp}	*6.83 A*	R_s	*0.251 ohm*
n_s	*50*	R_{sh}	*1168 ohm*
Temperature Coefficients			
K_i	*0.057%*	K_v	*-0.346%*

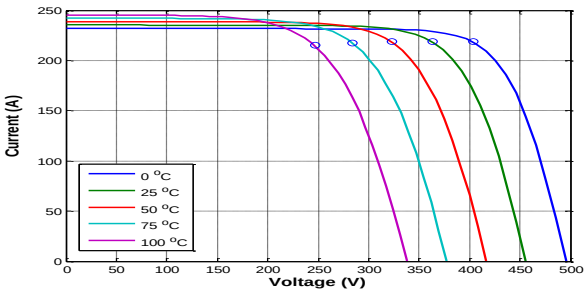

Fig. 6. Voltage-current characteristics of the PV array at an irradiance of 1 kW/m^2 with varying temperature.

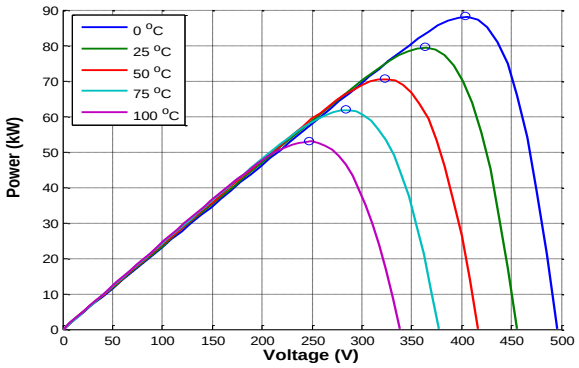

Fig. 7. Voltage-power characteristics of the PV array at an irradiance of 1 kW/m^2 with varying temperature.

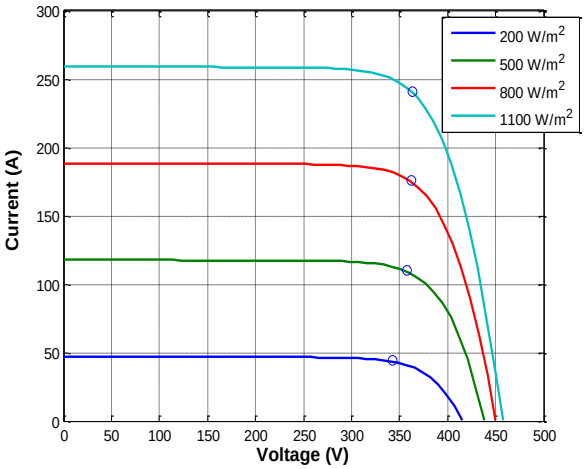

Fig. 8. Voltage-current characteristics of the PV array at 25°C and varying irradiance.

V. CONCLUSION

In this paper, first, a method for estimating the five parameters of the single diode model of the PV module is developed. The result is verified by making plots of the PV characteristic for varying environmental conditions.

TABLE II
MAXIMUM POWER POINT AT DIFFERENT ENVIRONMENTAL CONDITIONS

Irradiance (kW/m^2)	Temperature (°C)	V_{mpp} (V)	I_{mpp} (A)	P_{mpp} (kW)
1000	0	403.7	218.6	88.3
	25	363.0	219.3	79.6
	50	323.1	218.7	70.7
	75	284.3	217.3	61.8
	100	246.7	215.2	53.1
200	25	342.7	43.8	15.0
500		357.8	109.9	39.3
800		362.2	175.6	63.6
1100		363.0	240.7	87.4

TABLE III
ESTIMATED PARAMETERS OF AN ARRAY AS RELATED TO THAT OF A MODULE

$N_{ss} = 15, N_{pp} = 32$		
Equivalent Array Parameters		Relationship with Module Parameters
I_{ph}	*235.57 A*	$I_{ph} \times N_{pp}$
I_o	*3.314 μA*	$I_o \times N_{pp}$
A	*1.310*	A
R_s	*0.117 ohm*	$R_s \times N_{ss} / N_{pp}$
R_{sh}	*547.77 ohm*	$R_{sh} \times N_{ss} / N_{pp}$

VI. REFERENCES

[1] 1. D. Sera, R. Teodorescu, and P. Rodriguez, "PV panel model based on datasheet values," *IEEE International Symposium on Industrial Electronics*, pp. 2392-2396, Jun 2007.

[2] 2. B. Galiana, C. Algora, I. Rey-Stolle, and I. G. Vara, "A 3-D model for concentrator solar cells based on distributed circuit units," *IEEE Trans. Electron Devices*, vol. 52, no. 12, pp. 2552-2558, Dec 2005.

[3] 3. J. W. Kimball and P. T. Krein, "Discrete-time ripple correlation control for maximum power point tracking," *IEEE Trans. Power Electronics*, vol. 23, no. 5, pp. 2353-2362, Sep 2008.

[4] 4. T. Esram and P.L. Chapman, "Comparison of photovoltaic array maximum power point tracking techniques," *IEEE Trans. on Energy Conversion*, vol. 22, no. 2, pp. 439-449, Jun 2007.

[5] 5. A. Keyhani, M. Dai, and M.N. Marwali, Integration of Renewable and Green Energy in Electric Power System, Wiley 2010.

[6] 6. M. Dai, M.N. Marwali, J.W. Jung, and A. Keyhani, "Power flow control of a single distributed generation unit," *IEEE Trans. on Power Electronics*, vol. 23, no. 1, pp. 343-352, Jan 2008.

[7] Keyhani, A. Design of Smart Grid Renewable Energy Systems, NJ, Wiley; 2011

Ali Keyhani (S'72–M'76–SM'89–F'98) received the B.E., M.S.E.E., and Ph.D. degrees from Purdue University, West Lafayette, IN, in 1967, 1973, and 1976, respectively.

He is currently Professor of Electrical Engineering at The Ohio State University (OSU), Columbus, Ohio. He is also the Director of the OSU Electromechanical and Green Energy Systems Laboratory. From 1967 to 1972, he was with Hewlett-Packard Company and TRW Control, Palo Alto, CA. His current research interests include control of distributed energy systems, power electronics, multilevel converters, power systems control, alternative energy systems, fuel cells, photovoltaic cells, microturbines, distributed generation systems, and parameter estimation and control of electromechanical systems.

Professor Keyhani was the Past Chairman of the Electric Machinery Committee of IEEE Power Engineering Society and the Past Editor of the 3 University College of Engineering Research Award in 1989, 1999, and 2003.